USER GUIDE

2 Gallon Water Boiler

READ AND SAVE THESE INSTRUCTIONS

NOTICE TO INSTALLER: Please leave this booklet with the machine.

Key Features/Specifications/System Requirements....FS39
Important Safeguards....IS2
Installation Instructions (General)....II20
Installation Instructions (Leveling, Water Supply, Electrical)....II21
Cleaning Instructions....CI16
Rough-In Drawing....RD45
Illustrated Parts/Recommended Parts....IP73
Illustrated Parts/Recommended Parts (Tank Assembly)....IP74
Electrical Schematic....ES83
Troubleshooting Guide....TG22
Troubleshooting Guide....TG31
Product Warranty....PW1

Contact Information

Wilbur Curtis Co., Inc.
6913 Acco Street | Montebello, CA 90640 US
Phone: 323-837-2300 | Toll Free: 800-421-6150
Email: csrassistance@wilburcurtis.com | Web: www.wilburcurtis.com

For the latest specifications and information go to www.wilburcurtis.com
Toll Free: 800-995-0417 | Monday - Friday 5:30 A.M. - 4:00 P.M. PT
Email: techsupport@wilburcurtis.com

Due to continued product improvement, the products illustrated/photographed in this guide may vary slightly from the actual product.

Key Features

- Automatic Refill System – For hot water anytime.
- Industry's most mineral tolerant design.

Specifications (Selected Models)

Electrical Supply Requirements

MODEL #	DESCRIPTION	PHASE	VOLTS	AMPS	HEATING CONFIG	WIRE	WATTS	HERTZ	GAL/HR
WB2A10	2.0 Gallon - domestic	1 PH	120 V	13.3 A	1 X 1600 W	2W + G	1600 W	50/60 Hz	5.0
WB2A20	2.0 Gallon - Canada	1 PH	120 V	12.5 A	1 X 1450 W	2W + G	1500 W	50/60 Hz	4.5
WB2A30	2.0 Gallon - export	1 PH	230 V	9.5 A	1 X 2000 W	2W + G	2200 W	50/60 Hz	6.8

Dimensions / Water Supply Requirements

MODEL #	HEIGHT	WIDTH	DEPTH	SHIP WEIGHT	SHIP CUBE	WATER CONNECTOR	WATER PRESSURE	MIN. FLOW RATE
WB2A10	23.85"	8.00"	14.86"	26.0 lbs	5.3 cu ft	1/4" flare	20 - 90 psi	1.0 gpm
WB2A20	23.85"	8.00"	14.86"	26.0 lbs	5.3 cu ft	1/4" flare	20 - 90 psi	1.0 gpm
WB2A30	23.85"	8.00"	14.86"	26.0 lbs	5.3 cu ft	1/4" flare	20 - 90 psi	1.0 gpm

Symbols

This is the safety alert symbol. It is used to alert you to potential physical injury hazards. Obey all safety messages that follow this symbol to avoid possible injury or death.

DANGER - Indicates a hazardous situation which, if not avoided, will result in death or serious injury.

WARNING - Indicates a hazardous situation which, if not avoided, could result in death or serious injury.

CAUTION - Indicates a hazardous situation which, if not avoided, could result in minor or moderate injury.

NOTICE - Indicates a situation which, if not avoided, could result in property damage.

IMPORTANT - Provides information and tips for proper operation.

SANITATION REQUIREMENTS

WARNING - This product can expose you to chemicals including Acrylamide and Bisphenol A (BPA), which are known to the State of California to cause cancer and birth defects or other reproductive harm. For more information visit www.P65Warnings.ca.gov.

Important Safeguards/Conventions

WARNING:

- Make sure that this appliance is installed and grounded according to the INSTALLATION INSTRUCTIONS by qualified personnel before attempting to use it. Failure to follow the INSTALLATION INSTRUCTIONS could result in personal injury or void the warranty.
- This appliance is designed for commercial use. Any service other than cleaning and preventive maintenance should be performed by an authorized Wilbur Curtis service technician.
- To reduce the risk of fire or electric shock, DO NOT open the service panels. There are no user serviceable parts inside.
- Keep hands, arms and other items away from hot surfaces of the unit during operation.
- Clean the appliance and any dispensers completely before using them for the first time as according to the CLEANING INSTRUCTIONS. Clean them regularly as instructed in the CLEANING INSTRUCTIONS.
- Use this appliance only for its intended use, brewing/dispensing hot and/or cold beverages/water.
- This appliance is not intended for use by persons (including children) with reduced physical, sensory or mental capabilities or lack of experience and knowledge, unless they have been given supervision or instruction concerning use of the appliance by a person responsible for their safety. Children should be supervised to ensure that they do not play with the appliance.
- Avoid spillage onto the power (mains) connector.

CE Requirements

- This appliance must be installed in locations where it can be overseen by trained personnel.
- For proper operation, this appliance must be installed where the temperature is between 5°C to 35°C.
- Appliance shall not be tilted more than 10° for safe operation.
- An electrician must provide electrical service as specified in conformance with all local and national codes. For safe use, an all-pole disconnection must be incorporated into the fixed wiring in accordance with the wiring rules outlined in clause 7.12.2 of IEC 6.335-1 for meeting the minimum electrical safety of this standard.
- This appliance must not be cleaned by water jet.
- This appliance can be used by persons aged from 18 years and above if they have been given supervision or instruction concerning use of the appliance in a safe way and if they understand the hazards involved.
- Keep the appliance and its cord out of reach of children aged less than 18 years.
- Appliances can be used by persons 18 years and above with reduced physical, sensory or mental capabilities or lack of experience and knowledge if they have been given supervision or instruction concerning use of the appliance in a safe way and understand the hazards involved.
- Children under the age of 18 years should be supervised to ensure they do not play with the appliance.
- If the power cord is ever damaged, it must be replaced by the manufacturer or authorized service personnel with a special cord available from the manufacturer or its authorized service personnel in order to avoid a hazard.
- Machine must not be immersed for cleaning.
- Cleaning and user maintenance shall not be made by children unless they are older than 18 years and supervised.
- This appliance is intended to be used in household and similar applications such as:

  – staff kitchen areas in shops, offices and other working environments;

  – by clients in hotels, motels and other residential type environments;

  – bed and breakfast type environments.
- This appliance not intended to be used in applications such as:

  – farm houses
- Access to the service areas permitted by Authorized Service personnel only.
- The A-Weighted sound pressure level is below 70 dBA.

WARNING: Installation is to be performed only by a qualified installer.

WARNING: Improper electrical connection may result in an electric shock hazard. This brewer must be properly grounded.

NOTICE: DO NOT connect this appliance to a hot water supply. The water inlet valve is not rated for hot water. Do not exceed the maximum water pressure stated in the *SPECIFICATIONS* section.

IMPORTANT: Observe all governing codes and ordinances.

Installation Instructions

Installation Requirements

- A secure surface capable of supporting the weight of the appliance.
- For units without an attached cord set: Appropriately sized, UL listed, grounding type power cable to meet the electrical specifications for the appliance. If you have questions about the correct cable size and length, consult a qualified installer. If the unit will be hard wired to a junction box, the power cable must be long enough so that it can be moved for cleaning underneath.
- A grounded electrical connection to an electrical circuit that meets the electrical specifications of the appliance (see *SPECIFICATIONS*). The circuit must be protected by the appropriate sized circuit breaker. If you are not certain that the existing circuit meets the requirements for your unit, consult a licensed electrician.
- A water filtration system is required to maintain trouble-free operation. Wilbur Curtis Co., Inc. recommends a Wilbur Curtis approved water filter. Visit www.wilburcurtis.com to see the full line of Wilbur Curtis approved water filters.
- Potable water supply line connection from the water filter capable of supplying the minimum flow rate required by the specifications. The water supply line must be able to connect to the flare fitting on the back of the brewer. See the *SPECIFICATIONS* section for the correct size. The water line should also be capable of being controlled by a shut off valve. Do not connect the water line to a saddle valve.

NSF International requires the following water connection:

1. A quick disconnect or additional coiled tubing (at least two times the depth of the brewer) is required so that it can be moved for cleaning underneath.
2. This equipment is to be installed with adequate back-flow protection to comply with applicable federal, state and local codes.
3. Water pipe connections and fixtures directly connected to a potable water supply shall be sized, installed and maintained in accordance with federal, state and local codes.

The International Plumbing Code of the International Code Council and the Food and Drug Administration (FDA) Food Code manual, direct that this equipment must be installed with adequate back-flow prevention in compliance with federal, state and local codes. For units installed outside of the U.S.A., make sure that the installation is in compliance with the applicable plumbing/sanitation code for your area.

Installation

NOTICE: Failure to follow the *First Time Power Up Instructions* may result in damage to the unit.

Leveling

1 Position the water boiler on the countertop. Level it left to right and front to back by turning the bottom of the legs.

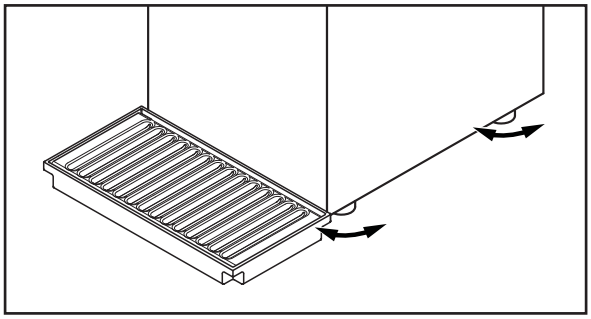

Connect the Water Supply

2 Flush the water supply line prior to installation to purge air and debris from the water filter and tubing.

3 Connect the water supply line to the flare fitting on the back of the unit. Leave the water supply valve closed until the power is connected.

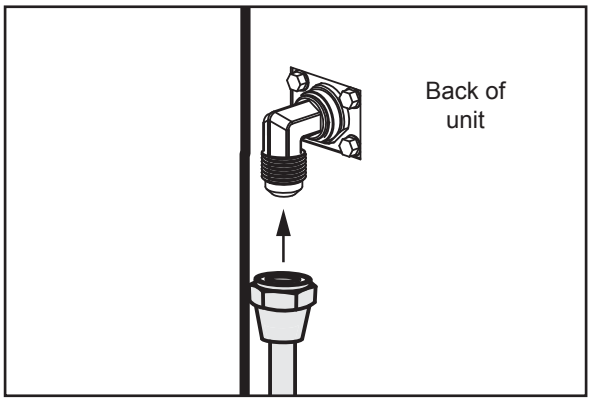

First Time Power Up Instructions

4 With the power cord disconnected, remove the cover from the top of the unit.

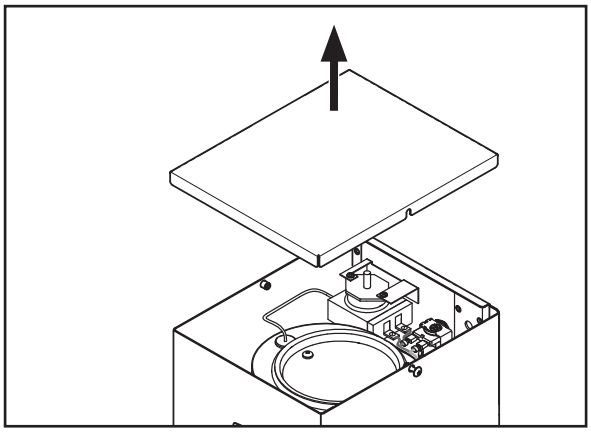

5 Turn the shaft on the thermostat completely counter-clockwise until it stops.

6 Replace the cover.

7 Turn on the water supply valve.

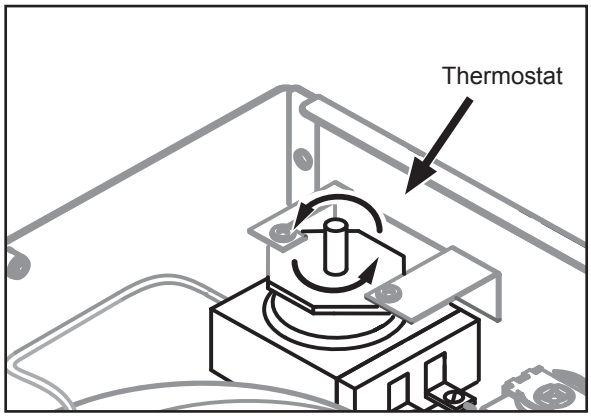

First Time Power Up Instructions (cont.)

WARNING: Connect the power cord to the appropriate type and size electrical outlet. If the electrical outlet is not compatible with the power cord, have it upgraded by a licensed electrician. Do not modify the power plug. Do not use an extension cord. Do not use a power cord/plug that is damaged.

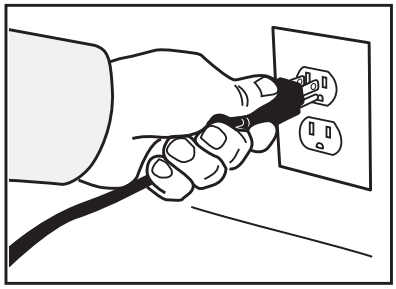

8 Connect the power cord to the appropriate type of electrical outlet.

9 Make sure that the circuit breaker supplying power to the electrical outlet is on.

10 Turn the toggle switch on the back of the unit to the ON position. The water tank will start to fill. While the tank is filling, inspect the water supply line for leaks.

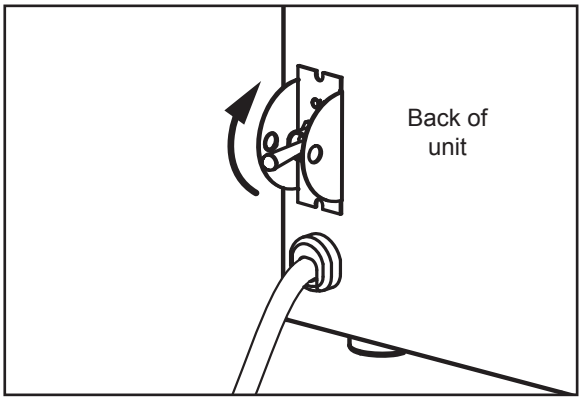

11 Once the water tank is full (you will hear the water stop flowing), turn off the power switch and disconnect the power cord.

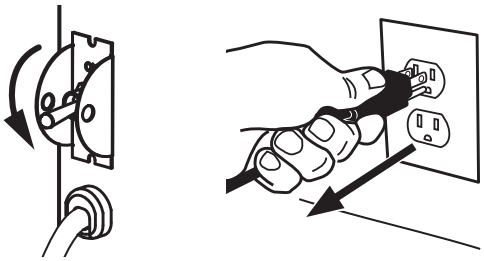

12 Remove the top cover and rotate the shaft on the thermostat completely clockwise.

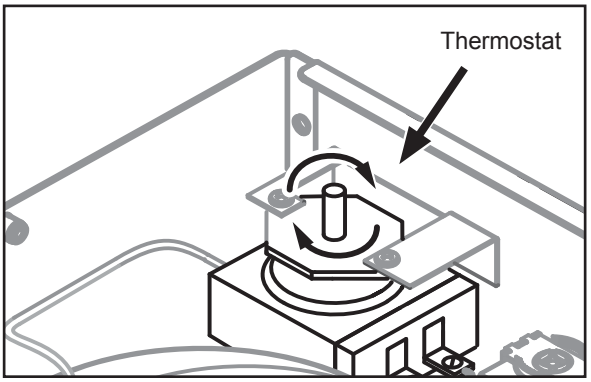

IMPORTANT: When operating the brewer at higher elevations, reduce the factory set operating temperature by 2°F for each 1000 feet of elevation above 4000 feet. Turn the screw inside the shaft clockwise to reduce the temperature. Each 1/4 turn reduces the temperature about 28°F.

Replace the top cover. Reconnect the power cord and turn on the toggle switch on the back of the unit.

13 Depending on the incoming water temperature and the electrical specifications, the water tank typically requires 20 to 30 minutes to reach the factory set operating temperature.

14 Dispense 12 ounces of hot water through the faucet to help purge air from the tubing inside the unit.

WARNING: HOT SURFACES - To avoid injury, allow the unit to cool 30 minutes before cleaning.

NOTICE - Do not use cleaning liquids, compounds or powders containing chlorine (bleach) or corrosives. These products promote corrosion and will damage the finishes. **USE OF THESE PRODUCTS WILL VOID THE WARRANTY.**

Cleaning The Water Boiler and Dispensing Head - Daily or As Needed

WARNING: DO NOT immerse the water boiler in water or any other liquid.

The water boiler should be OFF. Turn the unit off by turning the rear toggle switch to the OFF position. Allow it to cool.

1 Wipe exterior surfaces with a soft, damp cloth soaked with a mild detergent solution to remove spills and debris.

2 Rinse with a soft cloth soaked with clean water to remove any residual detergent. Then dry.

3 If applicable, remove the drip tray screen and rinse it off. Wipe out the interior of the drip tray with a soft, damp cloth. Replace the screen.

Flushing the Pre-heat Coil (Corinth Models) - Twice a Year

It is recommended that the pre-heat coil be flushed twice a year by a qualified technician according to the instructions in the *Troubleshooting* section.

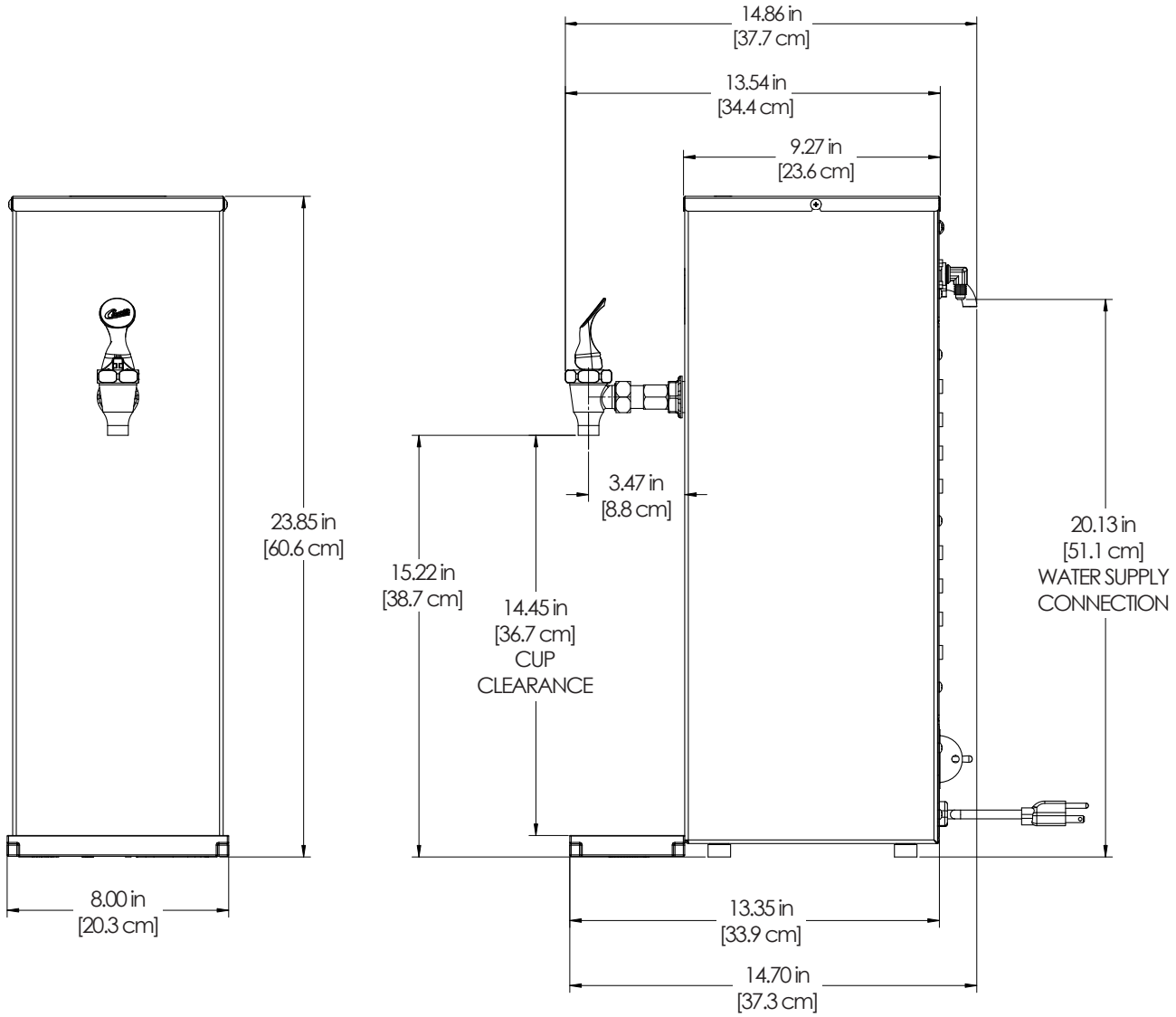
14.86 in
[37.7 cm]
13.54 in
[34.4 cm]
9.27 in
[23.6 cm]
23.85 in
[60.6 cm]
3.47 in
[8.8 cm]
15.22 in
[38.7 cm]
14.45 in
[36.7 cm]
CUP
CLEARANCE
20.13 in
[51.1 cm]
WATER SUPPLY
CONNECTION
8.00 in
[20.3 cm]
13.35 in
[33.9 cm]
14.70 in
[37.3 cm]

WB2A10/20/30 - Main Chassis - Exploded View

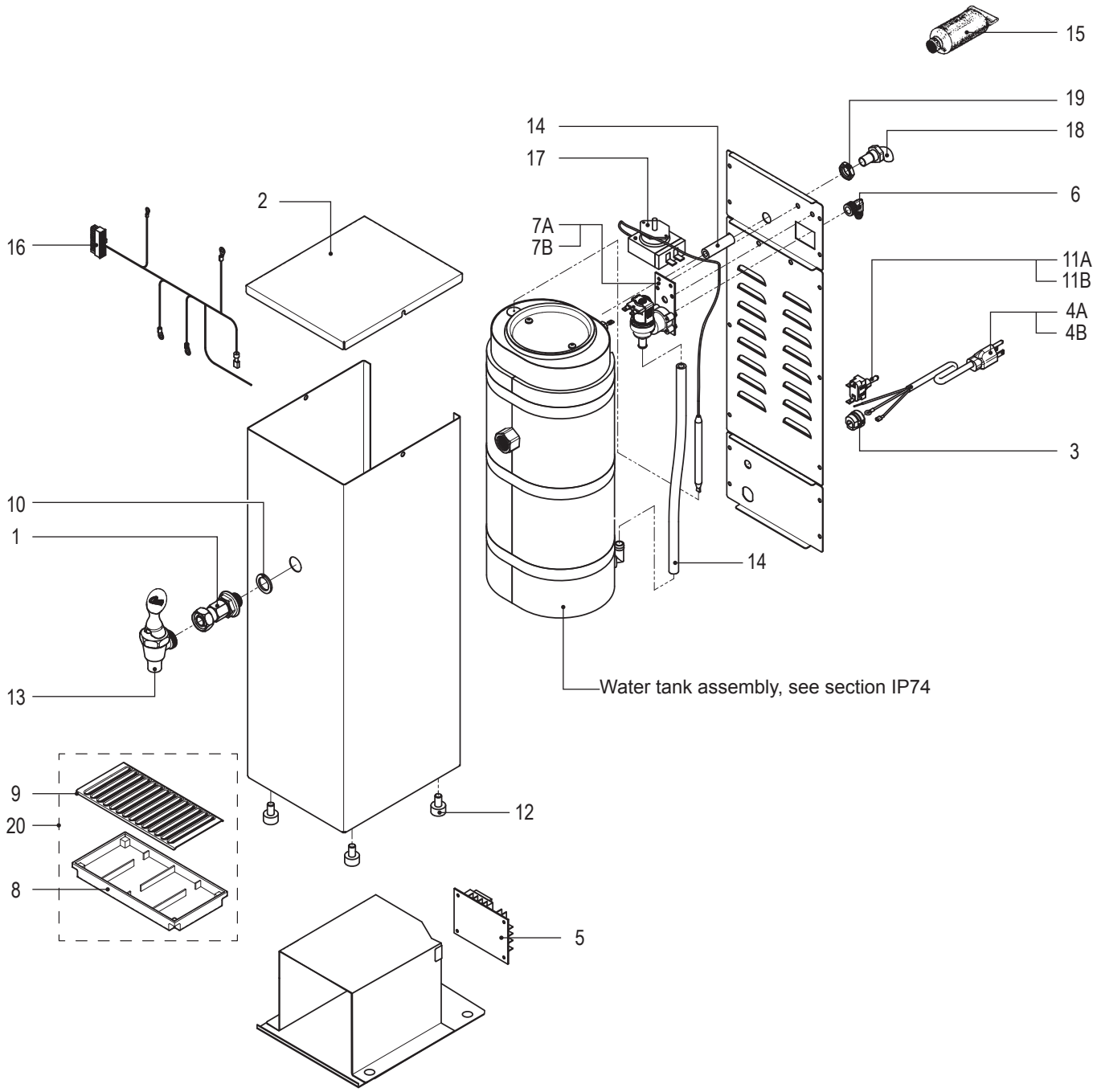

WB2A10/20/30 - Main Chassis - Parts List

ITEM #	PART #	DESCRIPTION
1	WC-1902-101	SHANK, FAUCET PLAIN ASSY
2	WC-58400	COVER, TOP
3	WC-1408	CORD GRIP, 7/8" O.D.
4A	WC-1200[1,3]	CORD, 14/3 SJTO 6' BLK W/PLUG
4B	WC-1231-103[2]	CORD, 2.5 mm² PRE-CUT W/ CONNECTORS
5	WC-10030	CONTROL MODULE,120/220V LIQUID LEVEL/BREW TIMER
6	WC-2401K	KIT, ELBOW 3/8 NPT X 1/4 FLARE
7A	WC-826L[1,3]	VALVE, INLET 1 GPM 120V 9W
7B	WC-856[2]	VALVE, INLET 1 GPM 240V 6W
8	WC-66039	PAN, DRIP TRAY PLASTIC DTP-08
9	WC-66042	SCREEN, DRIP TRAY 3.85" x 7.7"
10	WC-1813	WASHER, 1-1/8" OD ETHYLENE PROPYLENE RUBBER

ITEM #	PART #	DESCRIPTION
11A	WC-102[1,3]	SWITCH, TOGGLE NON-LIT SPST 15A 125/6A 250VAC RESISTIVE
11B	WC-103[2]	SWITCH, TOGGLE NON-LIT DPST 25A 125/250VAC RESISTIVE
12	WC-3503	LEG, 3/8"-16 STUD SCREW BUMPER
13	WC-1800HWK	KIT, FAUCET ASSY, RED HANDLE 1-1/32-14 UNS CURTIS
14	WC-5310	TUBE, 5/16 ID x 1/8W SILICONE GEN USE
15	WC-5231	COMPOUND, SILICONE 5 OZ
16	WC-13488	HARNESS ASSY, WB2A10
17	WC-504	THERMOSTAT, CAPILLARY SPST 250V 25A GEM
18	WC-2948	FITTING, TANK OVERFLOW 304SST
19	WC-4212	NUT, 5/8-18 JAM UNF SS
20	DTP-08	DRIP TRAY, ASSY PLASTIC 8"

[1]WB2A10, [2]WB2A30, [3]WB2A20

Recommended Parts to Stock

ITEM #	PART #	DESCRIPTION
5	WC-10030	CONTROL MODULE,120/220V LIQUID LEVEL/ BREW TIMER
7	WC-826L	VALVE, INLET 1 GPM 120V 9W
12	WC-3503	LEG, 3/8"-16 STUD SCREW BUMPER

ITEM #	PART #	DESCRIPTION
14	WC-5310	TUBE, 5/16 ID x 1/8W SILICONE GEN USE
17	WC-504	THERMOSTAT, CAPILLARY SPST 250V 25A GEM

WC-75333 Tank Assembly

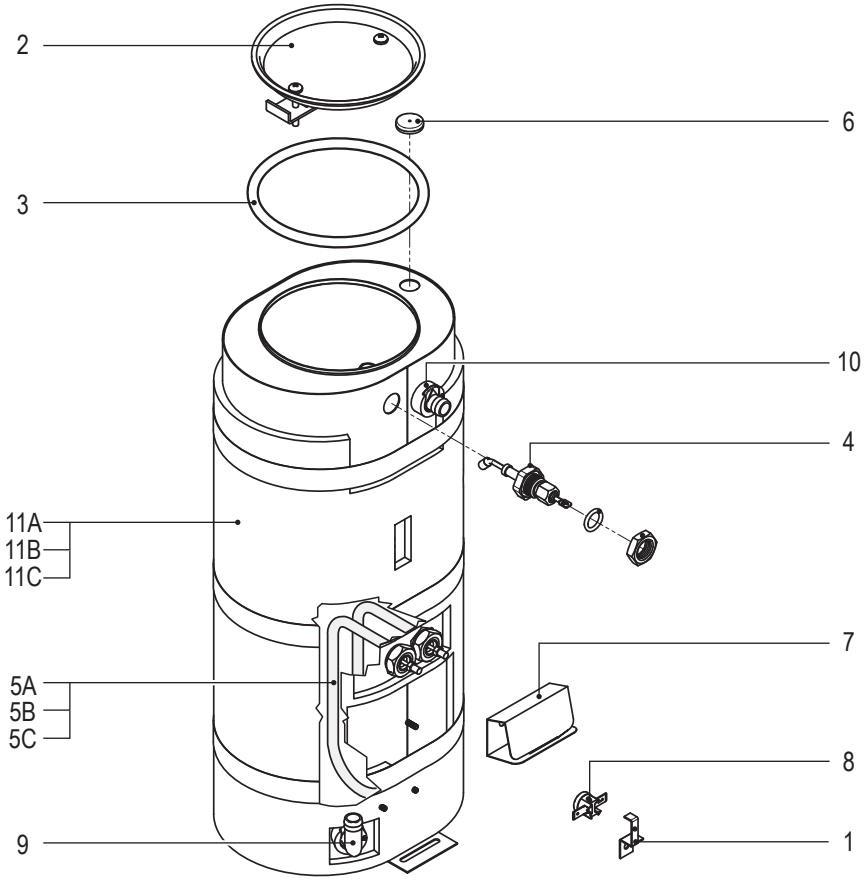

WC-75333 - Tank Assembly - Parts List

ITEM #	PART #	DESCRIPTION
1	WC-5418	CLIP, RESET THERMOSTAT GEN USE
2	WC-37008	KIT, TANK LID ROUND (INCLUDES GASKET)
3	WC-43067	O-RING, 4-1/2" I.D. X Ø.285 SILICONE TANK LID
4	WC-5527K	KIT, PROBE WATER LEVEL O-RING & NUT
5A	WC-904-04[1]	KIT,ELEMENT, HEATING 1.6KW120V W/ JAM NUT & SILICONE O-RING
5B	WC-906-04[2]	KIT, ELEMENT, HEATING 2KW 220V W/ JAM NUT & SILICONE O-RING
5C	WC-917-04[3]	ELEMENT, HEATING 1.45KW 120V W/JAM NUTS & SILICONE O-RING
6	WC-4314	INSERT, SILICONE GROMMETS RD FDA GRADE

[1]120 V models, [2]220 to 240 V models, [3]Canadian models

ITEM #	PART #	DESCRIPTION
7	WC-4394	GUARD, SHOCK/HEATING ELEMENT FOR SINGLE HEATING ELEMENT
8	WC-521	THERMOSTAT, HI-LIMIT SPST 120V 15A AUTO-RE-SET
9	WC-37365	KIT, FITTING TANK INLET
10	WC-37266	KIT, FITTING TANK OVERFLOW
11A*	WC-75333[1]	TANK, ASSY WB2A10
11B*	WC-75333-30[2]	TANK, ASSY W/WC-906 2000W HEATING ELEMENT
11C*	WC-75333-20[3]	TANK, ASSY W/WC-917 1450W HEATING ELEMENT

Recommended Parts to Stock

ITEM #	PART #	DESCRIPTION
2	WC-37008	KIT, TANK LID ROUND (INCLUDES GASKET)
3	WC-43067	O-RING, 4-1/2" I.D. X Ø.285 SILICONE TANK LID
4	WC-5527K	KIT, PROBE WATER LEVEL O-RING & NUT
5	WC-904-04	KIT,ELEMENT, HEATING 1.6KW120V W/ JAM NUT & SILICONE O-RING

ITEM #	PART #	DESCRIPTION
8	WC-521	THERMOSTAT, HI-LIMIT SPST 120V 15A AUTO-RE-SET
9	WC-37365	KIT, FITTING TANK INLET
10	WC-37266	KIT, FITTING TANK OVERFLOW

*

NOTICE: After replacing or emptying the water tank, be sure to run the *First Time Power Up Instructions* in the *INSTALLATION INSTRUCTIONS* section. Failure to do so may result in damage to the unit.

WB2A10

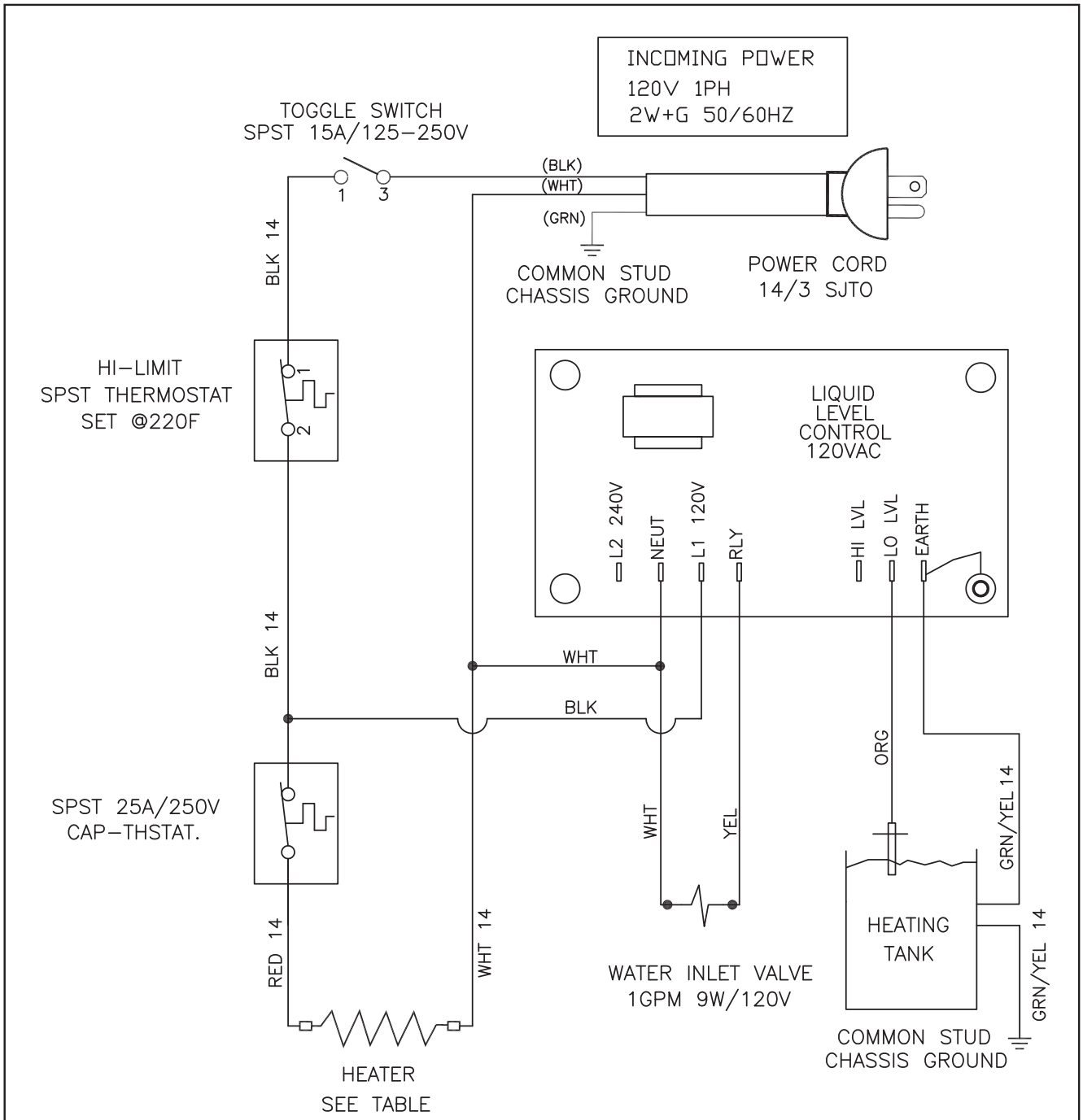

ELECTRICAL RATING TABLE

MODEL	Voltage V	Amps A	Watts W	Hertz Hz.	# of Conductor Wires	Phase	# of Tank Elements	Tank Element Rating W/V
WB2A10	110	12.2	1300	50/60	2	1	1	1600W/120V
	120	13.3	1600					
WB2A20	110	11.1	1200	50/60	2	1	1	1450W/120V
	120	12.5	1500					

2 USE THIS DIAGRAM FOR ALL OTHER MODELS WITH ADDED PREFIX LETTERS AND/OR SUFFIX NUMBERS ON THEIR PART NUMBERS HAVING THE SAME ELECTRICAL RATING.
1 ALL WIRES SHALL BE MIN. 18AWG PVC/UL1015 UNLESS NOTED.
NOTES: UNLESS OTHERWISE SPECIFIED.

VOLTAGE: --	TITLE: LADDER DIAGRAM WATER BOILER 2GAL
WATTAGE: --	
AMPERAGE: --	
HERTZ: --	PART NUMBER: LD-WB2A10
WIRES: --	REVISION: A
PHASE: --	

WB2A30

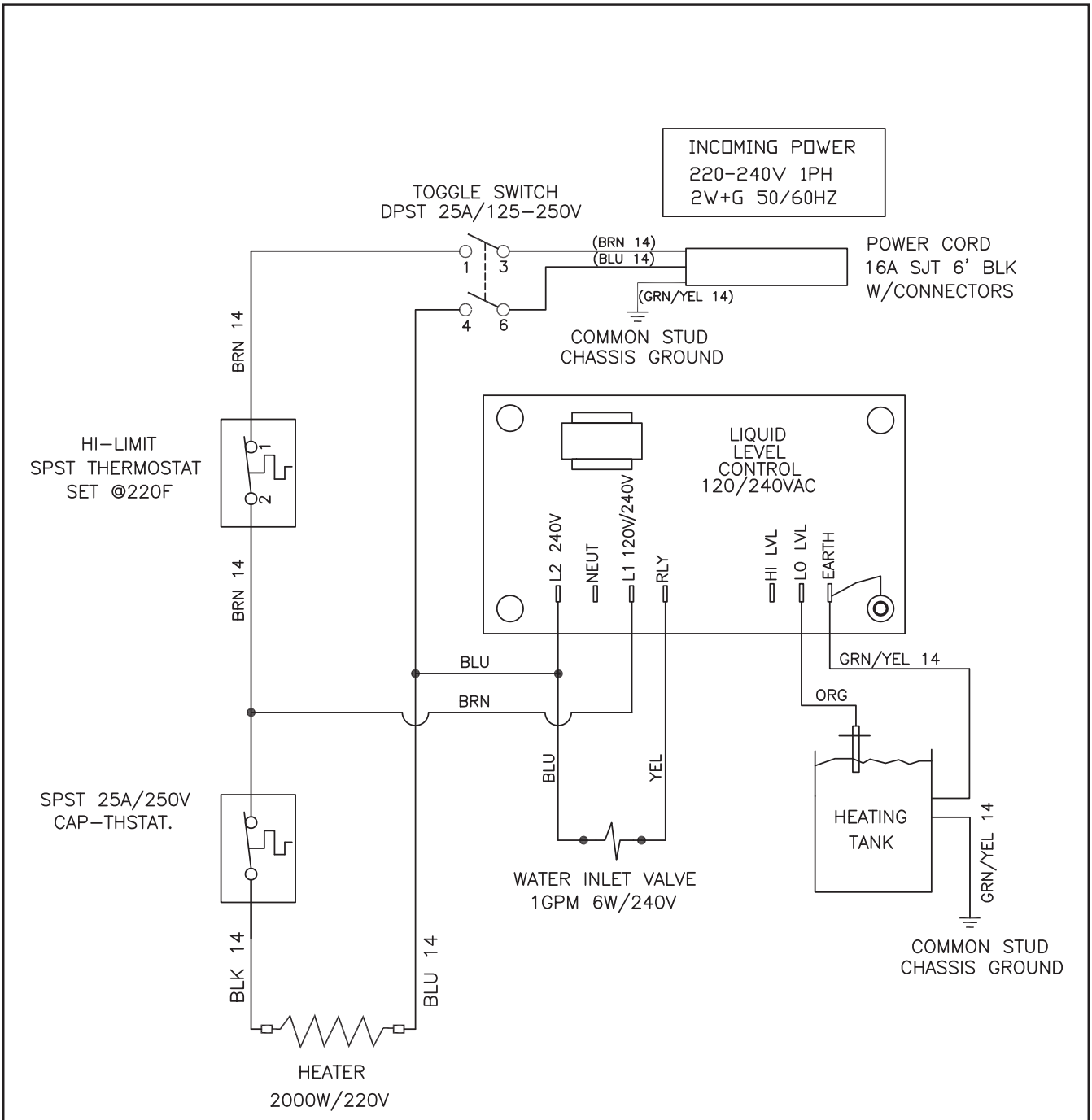

ELECTRICAL RATING TABLE

MODEL	Voltage V	Amps A	Watts W	Hertz Hz.	# of Conductor Wires	Phase	# of Tank Elements	Tank Element Rating W/V
WB2A30	220	9.1	2000	50/60	2	1	1	2000W/220V
	230	9.5	2200					
	240	9.9	2400					

2 USE THIS DIAGRAM FOR ALL OTHER MODELS WITH ADDED PREFIX LETTERS AND/OR SUFFIX NUMBERS ON THEIR PART NUMBERS HAVING THE SAME ELECTRICAL RATING.
1 ALL WIRES SHALL BE MIN. 18AWG PVC/UL1015 UNLESS NOTED.
NOTES: UNLESS OTHERWISE SPECIFIED.

VOLTAGE: --	TITLE: LADDER DIAGRAM WATER BOILER 2GAL
WATTAGE: --	
AMPERAGE: --	
HERTZ: --	PART NUMBER: LD-WB2A30
WIRES: --	REVISION: NC
PHASE: --	

WARNING:

Electric Shock Hazard - the following procedures are to be performed only by a qualified service technician. Disconnect power when replacing components. Neither Wilbur Curtis Co., Inc. nor the seller can be held responsible for the interpretation of this information, or any liability in connection with its use.

Scald and Burn Hazard - keep body parts clear of hot surfaces during troubleshooting.

NOTICE: After replacing or emptying the water tank, be sure to run the First Time Power Up Instructions in the Installation Instructions section. Failure to do so may result in damage to the unit.

Troubleshooting Guidelines

- A water boiler that is not level may not function properly. Make sure the unit is properly leveled before proceeding.
- This troubleshooting guide identifies some, but not all, of the possible causes for common problems that can occur.
- Use this troubleshooting guide along with the appropriate *ELECTRICAL SCHEMATIC.*

Valve Test Procedure

Use a digital multi-meter to measure the resistance of valve coils.

Measure the resistance across the valve coil terminals with the wiring harness disconnected. Reverse the meter leads on the terminals and measure the resistance in the opposite direction. A resistance of less than 100 ohms, in either direction, indicates a shorted coil. The valve must be replaced.

If a shorted coil is not detected, test for an open coil:

1 Reconnect the valve terminals to the wiring harness.

2 Power up the unit with the appropriate cover removed to allow access to the valve.

3 Monitor the voltage at the inlet valve coil terminals. If voltage is present on the terminals, you should hear the valve click open/closed at the moment power is applied or removed from the terminals. The inlet valve should open any time the water tank is not full. If the valve does not open, replace the valve. If voltage is not detected, first check the wiring, then trace the fault back to the source.

No Power

1 Make sure the circuit breaker to the circuit supplying power to the unit is not tripped and is turned on.

2 On units with a power plug, make sure it is connected to the power receptacle.

3 Make sure that the main power toggle switch (if applicable) is turned ON.

4 Verify that all wires from the power cord are properly connected inside the unit. Check to make sure the wires are not burned/overheated. Loose connections create heat. Check chassis ground.

Water Tank Does Not Fill

IMPORTANT: No water or low water in the tank can cause the tank to overheat, resulting in the thermostat reset switch opening. If after correcting a tank fill problem there is no power to the control panel, wait for the water tank to cool and push the reset switch button to reset.

1 Check to make sure the water supply is turned on. Check for a plugged water supply line, water filter or inlet valve.

2 If there are no plugs in the water supply line, check for power across the inlet valve terminals. If power is being supplied, but there is no water flow, replace the inlet valve.

3 If power is not being supplied to the inlet valve, check the wires between the liquid level control board and the inlet valve. Check for corroded connections.

4 If the wiring between the control board and the inlet valve is OK, but there is no power to the inlet valve, remove the orange wire from the water tank probe. If the water tank starts to fill, replace the probe. If the water tank does not start to fill, replace the control board.

Water Tank Overfills

1 Turn the main power toggle switch OFF (or unplug the power cord). If water continues to flow when the power is turned off, replace the inlet valve.

2 If water stops flowing to the water tank when power is off and resumes when power is on, remove the orange wire from the water probe on the tank. While power is on, short the end of the orange wire to the metal surface on the outside of the tank. If the water tank stops filling when the orange wire is shorted to the tank, check for a corroded connection at the water probe.

3 If water does not stop flowing when the orange wire is shorted to the tank, check the tank ground connection and the continuity of the orange wire connecting to the liquid level control board. Also check the ground connection to the liquid level control board. If all connections are OK, replace the control board.

Water Not Hot Enough

1 If the water heats, but is not hot enough, first check for the correct temperature setting. Turn the shaft (or knob) on the thermostat clockwise.

2 If the water is still not hot enough, check the thermostat adjustment screw. Thermostats are set at the factory to cut off at 200ºF (recommended setting). Curtis does not recommend higher temperature settings. If necessary, adjust as follows:

Rotate the thermostat shaft (knob) all the way to the right. Remove the knob (if applicable). Locate the tiny adjustment screw, inside the stem. Using a small screw driver, adjust the temperature up or down: Turn the screw ¼ turn to the left to increase the temperature about 28°F. Turn ¼ to the right to decrease the temperature by 28°F. Allow half an hour for the temperature to settle, then insert a thermometer into the water through the access hole to measure the temperature. Repeat as necessary.

3 If changing the thermostat setting does not help, check the heating element for high resistance (see following page). If the element is OK, replace the thermostat.

Water Does Not Heat At All

- Check to see if the water level in the tank is in contact with the water level probe. If not, see *Tank Does Not Fill*.
- If the water heats, but is not hot enough, see *Water Not Hot Enough*.
- If the water tank is full, but the water is not hot, check the resistance across the leads of the capillary thermostat. If the thermostat is open when the water is hot, turn the thermostat shaft clockwise until it stops. If the thermostat still measures open, replace the thermostat.

Checking the heating element: The following steps are performed with the rear toggle switch in the ON position.

1 Check for power across the terminals of the heating element. If power is being supplied, remove the wires and check for an open heating element (nominal resistance is 13 Ohms).

2 If there is no power to the element, trace the circuit back (using the *ELECTRICAL SCHEMATIC*) to the power cord to find out where power is lost.

Water Heats More Slowly Than Usual

1 Check for the proper voltage across the terminals of the heating element.

2 If the proper voltage is being supplied, disconnect the heating element and check for high resistance (above 13 Ohms). Replace a heating element if the resistance is too high.

Water Too Hot (Boiling or Excessive Steaming)

IMPORTANT: When operating the brewer at higher elevations, reduce the factory set operating temperature by 2°F for each 1000 feet of elevation above 4000 feet. Turn the screw inside the thermostat shaft clockwise to reduce the temperature. Each 1/4 turn reduces the temperature approximatively 28°F.

1 First check to make sure that the temperature sensor is submerged in the water inside the tank.

2 Check for the thermostat setting see ***Water Not Hot Enough*** for adjustment instructions.

Wilbur Curtis Co., Inc. certifies that its products are free from defects in material and workmanship under normal use. The following limited warranties and conditions apply:

3 years, parts and labor, from original date of purchase on digital control boards
2 years, parts, from original date of purchase on all other electrical components, fittings and tubing
1 year, labor, from original date of purchase on all other electrical components, fittings and tubing

Additionally, Wilbur Curtis Co., Inc. warrants its grinding burrs for forty (40) months from the date of purchase or 40,000 pounds of coffee, whichever comes first. Stainless steel components are warranted for two (2) years from the date of purchase against leaking or pitting. Replacement parts are warranted for ninety (90) days from the date of purchase or for the remainder of the limited warranty period of the equipment in which the component is installed.

All in-warranty service calls must have prior authorization. For authorization, call the Technical Support Department at 800-995-0417. Additional conditions may apply. Go to www.wilburcurtis.com to view the full product warranty information.

CONDITIONS & EXCEPTIONS

The warranty covers original equipment at time of purchase only. Wilbur Curtis Co., Inc., assumes no responsibility for substitute replacement parts installed on Curtis equipment that have not been purchased from Wilbur Curtis Co., Inc. Wilbur Curtis Co., Inc. will not accept any responsibility if the following conditions are not met. The warranty does not cover:

- **Adjustments and cleaning:** *The resetting of safety thermostats and circuit breakers, programming and temperature adjustments are the responsibility of the equipment owner. The owner is responsible for proper cleaning and regular maintenance of this equipment.*
- **Replacement of items subject to normal use and wear:** *This shall include, but is not limited to, spray heads, faucets, light bulbs, shear disks, "O" rings, gaskets, silicone tubing, silicone elbows, canister assemblies, whipper chambers and plates, mixing bowls, agitation assemblies and whipper propellers.*

The warranty is void under the following circumstances:

- **Improper operation of equipment:** *The equipment must be used for its designed and intended purpose and function.*
- **Improper installation of equipment:** *This equipment must be installed by a professional technician and must comply with all local electrical, mechanical and plumbing codes.*
- **Improper voltage:** *Equipment must be installed at the voltage stated on the serial plate supplied with this equipment.*
- **Improper water supply:** *This includes, but is not limited to, excessive or low water pressure and inadequate or fluctuating water flow rate.*
- **Damaged in transit:** *Equipment damaged in transit is the responsibility of the freight company and a claim should be made with the carrier.*
- **Abuse or neglect (including failure to periodically clean or remove lime accumulations):** *The manufacturer is not responsible for variation in equipment operation due to excessive lime or local water conditions. The equipment must be maintained according to the manufacturer's recommendations.*

Repairs and/or Replacements are subject to Curtis' decision that the workmanship or parts were faulty and the defects showed up under normal use. All labor shall be performed during regular working hours. Overtime charges are the responsibility of the owner. Charges incurred by delays, waiting time, or operating restrictions that hinder the service technician's ability to perform service is the responsibility of the owner of the equipment. This includes institutional and correctional facilities. Wilbur Curtis Co., Inc. will allow up to 100 miles, round trip, per in-warranty service call.

Return Merchandise Authorization (RMA): All claims under this warranty must be submitted to the Wilbur Curtis Technical Support Department prior to performing any repair work or return of this equipment to the factory. **All returned equipment must be properly re-packaged in the original carton and received by Curtis within 45 days following the issuance of a RMA.** No units will be accepted if they are damaged in transit due to improper packaging. **NO UNITS OR PARTS WILL BE ACCEPTED WITHOUT A RETURN MERCHANDISE AUTHORIZATION (RMA). THE RMA NUMBER MUST BE MARKED ON THE CARTON OR SHIPPING LABEL. All warranty claims must be submitted within 60 days of service. Invoices will not be processed or accepted without a RMA number. Any defective parts must be returned in order for warranty invoices to be processed and approved.** All in-warranty service calls must be performed by an authorized service agent. Call the Wilbur Curtis Technical Support Department to find an agent near you.