G4 OMEGA 3.0 GALLON/6.0 GALLON COFFEE BREWING SYSTEMS

Single: OMGS (220 VAC)
OMGS16 (220 VAC)
Twin: OMGT (208 VAC)
OMGT10 (240 VAC)
OMGT16 (208 VAC)

OMGS/OMGS16
Single Coffee Brewer
Shown with One
TXSG0301S200
3.0 Gallon Dispenser
(Dispenser Sold Separately)

OMGT/OMGT10/OMGT16
Twin Coffee Brewer
Shown with Two
TXSG0301S200
3.0 Gallon Dispensers
(Dispensers Sold Separately)

Where High Volume Meets Precision Brewing.

The Omega® high volume coffee brewing system is designed to optimize coffee quality while reducing maintenance and service. On-board self-diagnostics continually sense proper brewing operations and displays a message to alert the operator if an action is required or preventative maintenance is needed.

Curtis Omega® systems are factory set for out-of-the-box operation with pre-programmed recipes that ensure a consistent brew, every time. And, with intuitive, scroll-through menus, it is easy to fine-tune the brewing parameters for your gourmet coffee profile.

FEATURES AT A GLANCE

- **High Volume Brewing** – OMGT/OMGT10/OMGT16 brews 36.0 gallons of coffee per hour. OMGS/OMGS16 brews 25.0 gallons of coffee per hour
- **High Volume Tank Capacity** – 6.5 gallons (Single), 14.5 gallons (Twin)
- **G4 Digital Control Board** – Password protected, precise control over all aspects of brewing, including pre-infusion, pulse-brew and volume control
- **Built-In Self Diagnostic System** – Alerts operator of system failure and machine preventive maintenance
- **On-Screen Instructions** – Easy to read and follow instructions on display for fast, intuitive operation and training
- **High-Volume Hot Water Faucet** – For instant beverages and other hot water needs. Dispenses 1.3 GPM
- **High Volume Brew Basket** – Can accommodate up to 28 oz of coffee grounds
- **USB Functionality** – USB port makes changes to program settings simple and efficient
- **Energy Saving Mode** – Easily customized setting reduces tank temperature during idle times
- **Pre-Set, One-Touch Global Recipes** – Based on coffee type, grind and weight to produce a gourmet coffee profile out-of-the-box
- **Electrical Conversion** – All Omega® units ship standard from the factory as 3-Phase. All units easily convert from three phase to single phase in the field.

VACUUM DISPENSERS

- **TXSG0301S200 3.0 Gallon Dispensers** – Proprietary vacuum construction dispensers provide the best heat retention in their class

OMGS/ OMGS16

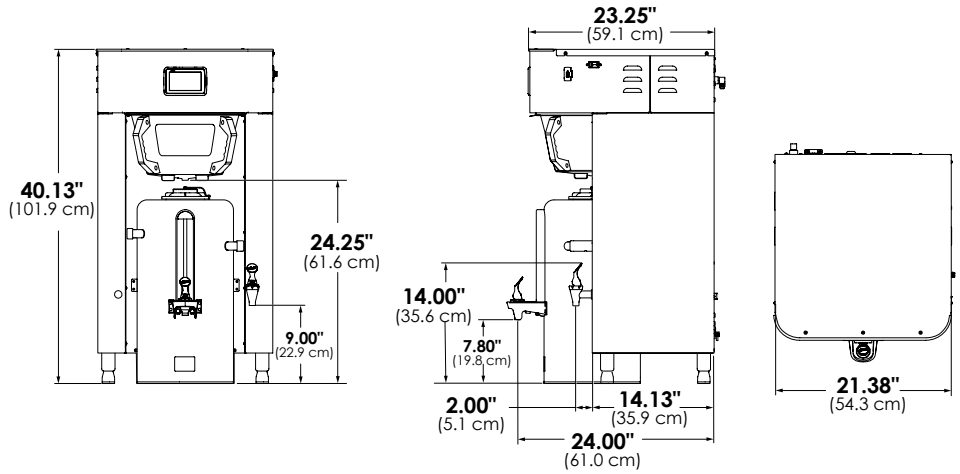

OMGT/ OMGT10/ OMGT16

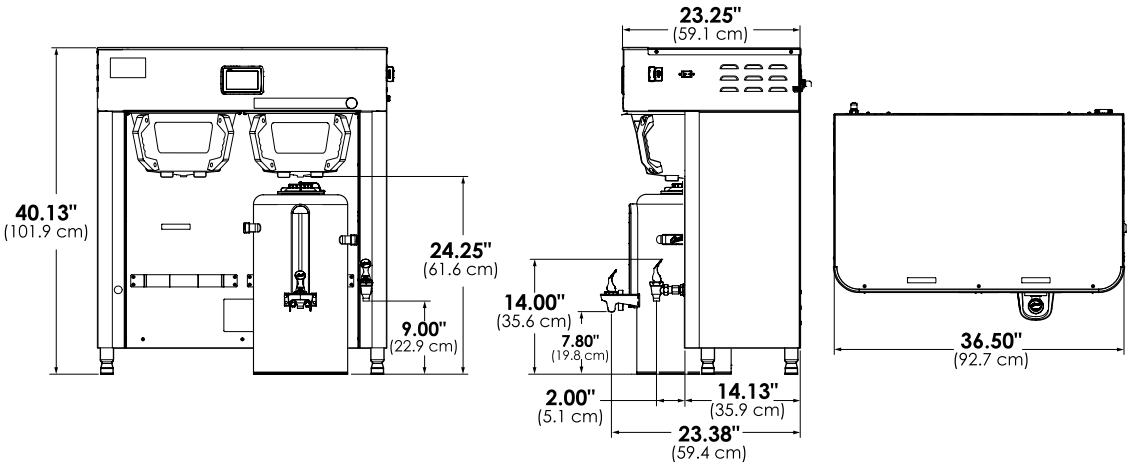

TXSG0301S200

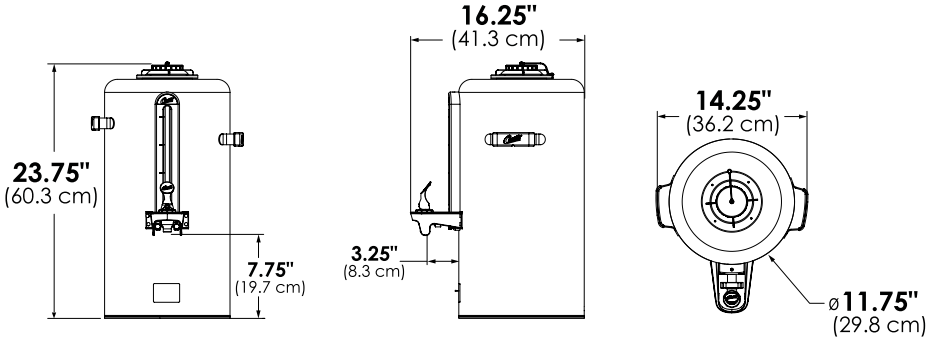

Electrical Supply Requirements

MODEL	PHASE	VOLTAGE	AMPS	HEATER CONFIG	WIRE	WATTS	HERTZ	GAL/HR
OMGS*	3 PH	220V	19.9A	3X2500W	4W+G	7600W	50/60 Hz	23.3
	1 PH**	220V	23.2A	2X2500W	3W+G	5100W	50/60 Hz	15.5
OMGS16*	3 PH	220V	19.9A	3X2500W	3W+G	7600W	50/60 Hz	23.3
	1 PH**	220V	23.2A	2X2500W	2W+G	5100W	50/60 Hz	15.5
OMGT*	3 PH	208V	34.0A	3X4000W	4W+G	12,200W	50/60 Hz	36.0
	1 PH**	208V	39.4A	2X4000W	3W+G	8200W	50/60 Hz	24.8
OMGT10*	3 PH	240V	29.4A	3X4000W	4W+G	12,200W	50/60 Hz	36.0
	1 PH**	240V	34.2A	2X4000W	3W+G	8200W	50/60 Hz	24.8
OMGT16*	3 PH	208V	34.0A	3X4000W	3W+G	12,200W	50/60 Hz	36.0
	1 PH**	208V	39.4A	3X4000W	2W+G	8200W	50/60 Hz	24.8

** Ships from factory standard 3-Phase*
*** Field convertible to single phase*

Dimensions

MODEL	HEIGHT	WIDTH	DEPTH	SHIP WEIGHT	SHIP CUBE
OMGS	40.13”	21.38”	23.25”	90.0 lbs.	16.00 cu. ft.
OMGS16	40.13”	21.38”	23.25”	90.0 lbs.	16.00 cu. ft.
OMGT	40.13”	36.50”	23.25”	160.0 lbs.	30.66 cu. ft.
OMGT10	40.13”	36.50”	23.25”	160.0 lbs.	30.66 cu. ft.
OMGT16	40.13”	36.50”	23.25”	160.0 lbs.	30.66 cu. ft.
TXSG0301S200	23.75”	14.25”	16.25”	29.0 lbs.	5.34 cu. ft.

Water Supply Requirements

MODEL	WATER CONNECT	WATER PRESSURE	MIN. FLOW RATE	WATER TANK VOLUME
OMGS	3/8” Flare	20-90 psi	4.0 GPM	6.5 gal.
OMGS16	3/8” Flare	20-90 psi	4.0 GPM	6.5 gal.
OMGT	3/8” Flare	20-90 psi	4.0 GPM	14.5 gal.
OMGT10	3/8” Flare	20-90 psi	4.0 GPM	14.5 gal.
OMGT16	3/8” Flare	20-90 psi	4.0 GPM	14.5 gal.

SPECIFICATIONS SUBJECT TO CHANGE WITHOUT NOTICE.

WARNING - These products can expose you to chemicals including Acrylamide and Bisphenol A (BPA), which are known to the State of California to cause cancer and birth defects or other reproductive harm. For more information visit www.P65Warnings.ca.gov

WILBUR CURTIS CO., INC.
6913 Acco Street, Montebello, CA 90640-5403
Telephone: 800-421-6150 · 323-837-2300
Technical Support: 800-995-0417 M-F 5:30am-4:00pm PST
Fax: 323-837-2406
www.wilburcurtis.com

AUG/2018 – F-3894 revF